Work Order ID 63881 PRELIMINARY ISSUE

Thursday, November 18, 2010 8:26:05 AM

Item ID: D4275-1
Revision ID: PRELIM
Item Name: Fwd Beam

Accept

Setup Start
Stop

Start Date: 11/18/2010 **Start Qty:** 2.00
Required Date: 11/30/2010 **Req'd Qty:** 2.00
Reference:

Cust Item ID:
Customer:

POSITIVE RECALL

Run Start
Stop

Approvals: **Process Plan:** P **Date:** 10-11-18 **Tooling:** **Date:**
QC: **Date:** **SPC (Y/N):** **Date:**

Draw Nbr	Revision Nbr
D4275	~~PA1~~ PA3

MATERIAL CERTIFICATION REQ'D UPON DELIVERY 02/01/11/23

Sequence ID/ Work Center ID	Operation Description	Set Up/ Run Hours	Tool ID	Tool #	Plan Code	Accept Qty	Reject Qty	Reject Number	Insp. Stamp
100	BAND SAW	0.00							
Bandsaw Jeaspa Bandsaw	**Memo** Cut Blank tO 39.750" Batch: M 107221	0.00				2	0		
110	HAAS CNC VERTICAL MACHINING #1	0.00							
HAAS 1 HAAS CNC vertical machine #1	**Memo** 1-Machine per folio FB006 DWG REV: PA1 FOLIO REV: 2 2- deburr rough edges	0.00				2	0		

ark 10/11/18

10/11/18

Work Order ID 63881

Thursday, November 18, 2010 8:26:05 AM

Item ID: D4275-1
Revision ID: PRELIM
Item Name: Fwd Beam

Accept

Setup Start
Stop

Start Date: 11/18/2010 **Start Qty:** 2.00
Required Date: 11/30/2010 **Req'd Qty:** 2.00
Reference:

Cust Item ID:
Customer:

Approvals: **Process Plan:** _____ **Date:** _____ **Tooling:** _____ **Date:** _____
QC: _____ **Date:** _____ **SPC (Y/N):** _____ **Date:** _____

Run Start
Stop

Sequence ID/ Work Center ID	Operation Description	Set Up/ Run Hours	Tool ID	Tool #	Plan Code	Accept Qty	Reject Qty	Reject Number	Insp. Stamp
120	QC2- Inspect parts off machine FAI/FAIB	0.00				2	Ø		
QC	Memo	0.00							
Quality Control	10/11/18								
130	QC8- Inspect parts - second check	0.00 – inspecta to PA3 Day only							
QC	Memo	0.00 8/10/11/15 (2)							
Quality Control									
140	Chemical Conversion Coat per QSI005 4.1	0.00				2	BR 10-11-19.		
HandFinish	Memo	0.00							
Hand Finishing									

Work Order ID 63881

Thursday, November 18, 2010 8:26:05 AM

Item ID: D4275-1
Revision ID: PP.ELIM
Item Name: Fwd Beam

Accept

Setup Start
Stop

Start Date: 11/18/2010 **Start Qty:** 2.00
Required Date: 11/30/2010 **Req'd Qty:** 2.00
Reference:

Cust Item ID:
Customer:

Run Start
Stop

Approvals: **Process Plan:** _____ **Date:** _____ **Tooling:** _____ **Date:** _____
QC: _____ **Date:** _____ **SPC (Y/N):** _____ **Date:** _____

Sequence ID/ Work Center ID	Operation Description	Set Up/ Run Hours	Tool ID	Tool #	Plan Code	Accept Qty	Reject Qty	Reject Number	Insp. Stamp
145 Powdercoat Powder Coating	White Gloss(Ref:4.3.5.1) per QSI005 4.3-Alum M115291 START. 9:30 OVEN T. 300 Finish: 10:00. Memo MASK AS PER DWG	0.00				2	BR	10-11-19.	
150 QC Quality Control	QC3- Inspect Part Finish => JL 10/11/19 Memo	0.00 0.00				2	Ø		
180 Packaging Packaging	Identify as per dwg & Stock Location:_____ Memo	0.00 0.00				test.			

Work Order ID 63881

Thursday, November 18, 2010 8:26:05 AM

Item ID: D4275-1
Revision ID: PRELIM
Item Name: Fwd Beam

Accept

Setup Start
Stop

Start Date: 11/18/2010 **Start Qty:** 2.00
Required Date: 11/30/2010 **Req'd Qty:** 2.00
Reference:

Cust Item ID:
Customer:

Run Start
Stop

Approvals: **Process Plan:** _____ **Date:** _____ **Tooling:** _____ **Date:** _____
QC: _____ **Date:** _____ **SPC (Y/N):** _____ **Date:** _____

Sequence ID/ Work Center ID	Operation Description	Set Up/ Run Hours	Tool ID	Tool #	Plan Code	Accept Qty	Reject Qty	Reject Number	Insp. Stamp
190	QC21- Final Inspection - Work Order Release	0.00					Rev. A		
QC Quality Control	Memo	0.00					10.11.23		

A. test low PA3
overall Dim tol. ok.

MF
10-11-23

POSITIVE RECALL
EFFECTIVE 10.11.19 AUTH _____
RELEASED _____ DATE _____

Picklist Print

Thursday, November 18, 2010 8:26:11 AM

Work Order ID: 63881

Parent Item: D4275-1

Parent Item Name: Fwd beam

Start Date: 11/18/2010 **Required Date:** 11/30/2010

Start Qty: 2.00 **Required Qty:** 2.00

Comments: IPP REV:A NEW ISSUE 10-11-17 JLM VERIFIED BY:DD

Component Item ID/ Item Name	Replacement Item ID	Mfg/ Purch	Bin Item	Primary Location	Last Location	Route Seq ID	Unit of Measure	Qty on Hand	Qty per Kit	Total Qty	Qty Issued	Date Issued	Status
M6061T6B1.000X04.000		Purchased	No			100	f	69.7988	3.3125	6.973684			

6061-T6 Bar 1.00 x 4.00

Location	Loc Qty	Loc Code
MAT03	69.7988	
107221	58.58	
114352	11.2188	

6.973 mh 10/14/18

DART AEROSPACE LTD	Work Order:	63881
Description: Fwd Beam	Part Number:	A4275-1
Inspection Dwg: A4275 Rev: PA3		Page 1 of 1

FIRST ARTICLE INSPECTION CHECKLIST

Drawing Dimension	Tolerance	Actual Dimension	Accept	Reject	Method of Inspection	Comments
3.50	±.030	3.500	✓		Vern SDG	
.75	±.030	.752	✓		"	
3.00	±.030	3.00	✓		"	
2.75	±.030	2.752	✓		"	
.75	±.030	.752	✓		"	
.734	±.010	.732	✓		"	
.108	±.010	.110	✓		"	
39.48	±.030	39.48	✓		"	
1.10	±.030	1.102	✓		TM SD-01	
2.70	±.030	2.698	✓		Vern SDG	
1.750	±.030	1.750	✓		"	
.60	±.030	.600	✓		"	
2.300	±.010	2.300	✓		"	
Ø .191	+.006 −.001	Ø.196	✓		"	
1.00	±.030	1.00	✓		"	
Ø.381	+.000 −.001	0.381	✓	NA	"	
3.50	±.030	3.50	✓		"	
.65	±.030	.648	✓		"	
1.70	±.030	1.70	✓		"	
.95	±.030	.948	✓		"	
8.280	±.010	8.280"	✓		SD-4 Tape needed	TRIAL INSTALL OKAY MP 10/11/23
26.700	±.010	26.700"	✓		SD-4 Tape needed	

Measured by:		Audited by:		Preliminary Approval:	
Date:	10/11/18	Date:	10/11/19 to PA3 Day only	Date:	

Rev	Date	Change	Revised by	Approved
E	10.04.14	Added preliminary approval	KJ	

10.04.15

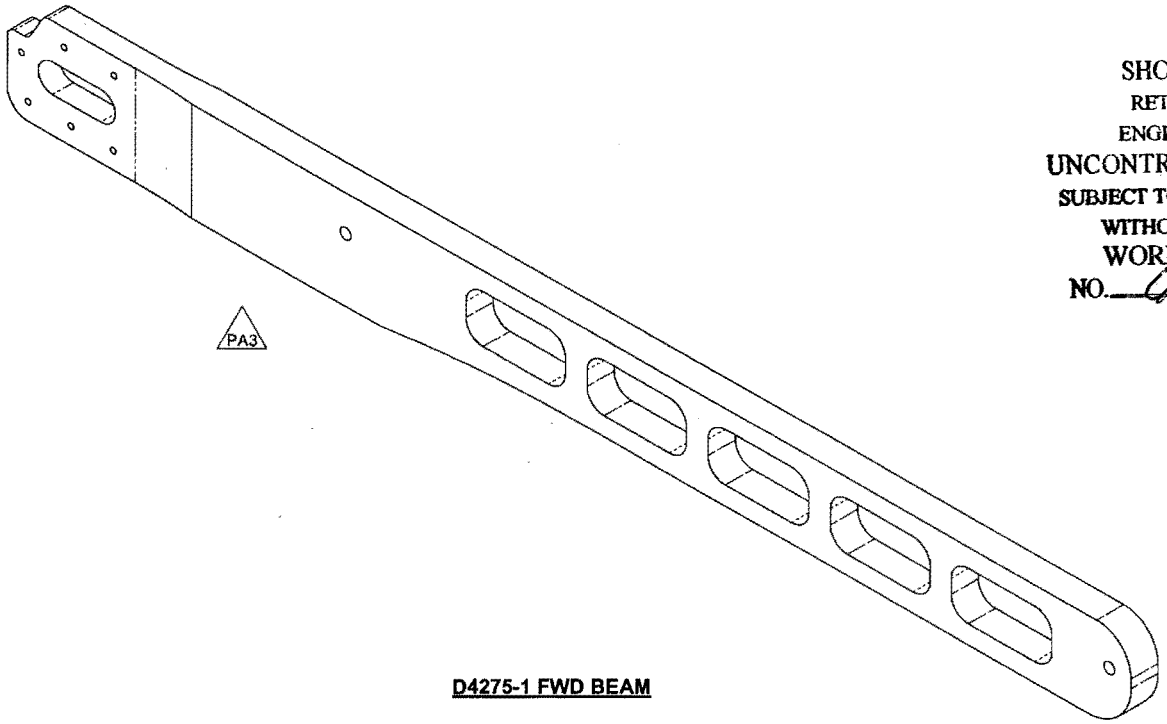

SHOP COPY
RETURN TO
ENGINEERING
UNCONTROLLED COPY
SUBJECT TO AMENDMENT
WITHOUT NOTICE
WORK ORDER
NO. 63881
BS 10-11-16

D4275-1 FWD BEAM

NOTES:
1) MATERIAL: 6061-T6/T651/T6510/T6511/T62 4.00 X 1.00 THICK ALUMINUM BAR
PER QQ-A-225/8 OR AMS-QQ-A-225/8 (OR AMS 4117/4128/4115/4116)
OR QQ-A-200/8 OR AMS-QQ-A-200/8 (OR AMS 4160)
OR ASTM B211 OR ASTM B221
REF DART SPEC M6061T6B1.000X4.000
2) FINISH: CHEMICAL CONVERSION COAT PER DART QSI 005 4.1
POWDER COAT WHITE (4.3.5.1) PER DART QSI 005 4.3
3) TOLERANCES: PER DART QSI 018 UNLESS OTHERWISE NOTED
4) UNITS: INCHES UNLESS OTHERWISE NOTED
5) BREAK SHARP EDGES: 0.005 TO 0.010 MAX
6) IDENTIFICATION: N/A
7) WEIGHT: 8.29 lbs
8) MASK HOLES PRIOR TO POWDER COAT.

PRELIMINARY ISSUE
Nov 17, 2010

REV.	DESCRIPTION	BY	DATE
PA3	CUTOUTS REMOVED/MODIFIED TO IMPROVE STIFFNESS	JPH	10.11.16
PA2	HOLE LOCATION LOWERED 0.200 (REF DETAIL C). NOTCH ENLARGED (D8-2)	JPH	10.11.16
PA1	PRELIMINARY	SC	10.11.12

DESIGN	SC	DART AEROSPACE LTD HAWKESBURY, ONTARIO, CANADA
DRAWN	JPH	
CHECKED		DRAWING NO. D4275 — REV. PA3 — SHEET 1 OF 2
MFG. APPR.		
APPROVED		TITLE: FWD BEAM — SCALE: NTS
DE APPR.		
DATE	10.11.16	

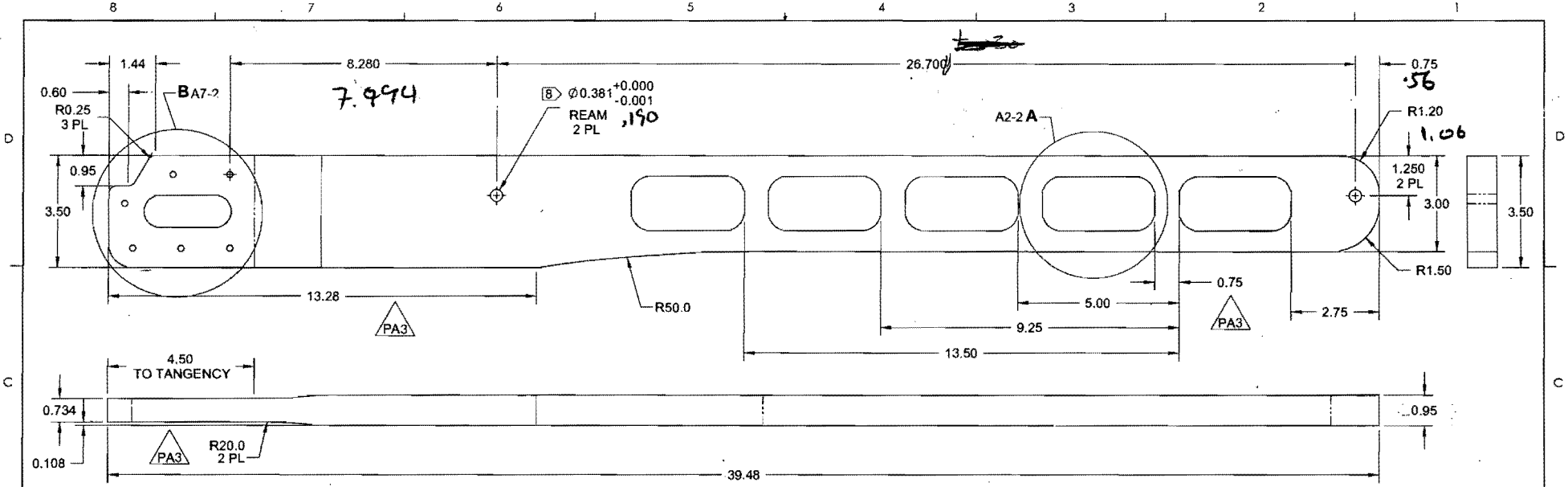

D4275-1 FWD BEAM

w/o 43881

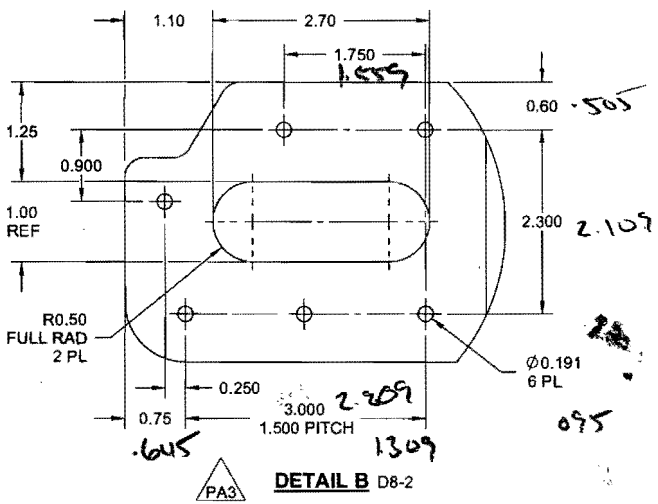

DETAIL B D8-2

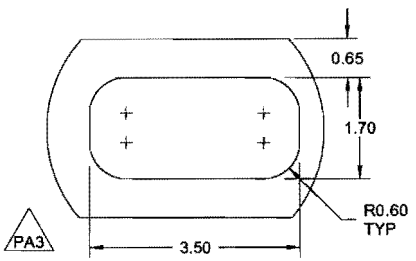

DETAIL A D3-2
5 PL

PRELIMINARY ISSUE
Nov 17, 2010

DESIGN	SC	**DART AEROSPACE LTD** HAWKESBURY, ONTARIO, CANADA
DRAWN	JPH	
CHECKED		DRAWING NO. D4275 — REV. PA3 — SHEET 2 OF 2
MFG. APPR.		
APPROVED		TITLE: FWD BEAM — SCALE: NTS
DE APPR.		
DATE	10.11.16	

Receiving Report

Date: 8/2/22

Batch No: M107221

Supplier: MAGNA

Dart P/O: 5756

Packing Slip: Yes ✓ No ___
Invoice: Yes ___ No ✓
Receipt: Cash ___ Cr ✓

Release Note Attached: Yes ✓ No ___ N/A ___
Waybill Attached: Yes ___ No ✓
Shipment Complete: Yes ✓ No ___ N/A ___
QC6 Inspection ✓ 2F N/A ___
Work Order ___ N/A ✓

Discrepancies

Part Number	Description	Quantity Ordered	Quantity Received	Quantity Returned	Quantity Short	Comments

Initials of receiver (if shipment OK) Level 12 ___

Production/Admin:
Date 08/02/25
Received/Costing RCR 7134
Initial CZ

Location ___

H:\FORMS\Purchasing\approved purch\RECREPORT Rev D

MAGNA
INOXYDABLE
Magna Stainless division de CSM Inc.
25 Meloche Ave., Dorval (Québec) H9P 2W2
Tél.: (514) 631-1211 • Fax: (514) 631-0013
Sans frais / Toll free: 1-800-363-6646

ISO 9001-2000

N° FACTURE / INVOICE NO.
154946

VENDU À - SOLD TO
DART
DART AEROSPACE LTD
1270 ABERDEEN STREET
HAWKESBURY
ONTARIO
K6A 1K7

EXPÉDIÉ À - SHIPPED TO
MEME - SAME

RECEIVED FEB 28 2008

DATE	N° LIVR. - DEL. NO.	PAR - VIA	N° COMM. DU CLIENT CUST. ORDER NO.	CONDITIONS - TERMS	N° T.V.Q. - Q.S.T. NO.	N° T.P.S. - G.S.T. NO.
Feb22/08	0164953	NIR:R-557065-1	5756		1213236477	861535899 RT0001

QTÉ EXP. QTY SHIPPED	DESCRIPTION	POIDS EXPÉDIÉ WEIGHT SHIPPED	PRIX - PRICE	UNITÉ UNIT	TOTAL
4	6061-T6 ALUM FLAT 1 X 4 X 20' Heat # 41756		210.00	PCS	840.00
	Sub-Total				840.00
	G.S.T.				42.00
				TOTAL ➔	882.00

FRAIS D'ADMINISTRATION DE 1½% PAR MOIS (18% PAR ANNÉE) SUR COMPTE PASSÉ DÛ.
LE PRÉSENT CONTRAT SERA RÉGI PAR LES LOIS DE LA PROVINCE DE QUÉBEC ET COMME AYANT PRIS NAISSANCE DANS LE DISTRICT JUDICIAIRE DE MONTRÉAL.
ADMINISTRATION CHARGES OF 1½% PER MONTH (18% PER YEAR) ON OVERDUE ACCOUNTS.
THE PRESENT AGREEMENT SHOULD BE GOVERNED BY THE QUEBEC LEGISLATION AND SHOULD BE CONSIDERED AS HAVING ORIGINATED IN THE JUDICIAL DISTRICT OF MONTREAL.

FORM # 0

Dart Aerospace Ltd

Receiving Slip

Date	Page
Feb 25, 2008	1

Receipt Number
RCP00007134

Dart Aerospace Ltd
1270 Aberdeen St
Hawksbury, Ontario K6A 1K7
Phone: (613) 632-3336
Fax: (613) 632-4443

Purchase From:

Magna Stainless
525 avenue Meloche
Dorval, QC H9P 2W2
Canada

Ship To:

Main Finished Goods Location
Dart Aerospace Ltd
1270 Aberdeen St
Hawksbury, Ontario K6A 1K7

Reference	Description	Contact	Vendor Number	PO Number
			VC-MAG002	PO00005756

Vendor Item Number	Item Number	Description	Qty. Received	UOM	Unit Cost	Extended Cost	Arrival Date
	M6061T6B1000X0	6061-T6 Bar 1.0" x 4.0"	80.0000	f	10.500000	840.00	Feb 25, 2008
		PER AMS-QQ-A-200/8 OR AMS 4160 PER AMS-QQ-A-225/8 OR AMS 4117/4128/4115/4116 MATERIAL: 6061-T6 OR 6061-T650/T6510/T6511/T62 BAR B/N107221					

Comments:

MAGNA

MAGNA STAINLESS DIV. DE CSM INC.
525 MELOCHE AVE.
DORVAL, QUEBEC H9P 2W2
(514) 631-1211 FAX: (514) 631-0013

COMMANDE
SALES ORDER

0164953

:NDU À /
)LD TO:

DART AEROSPACE LTD
1270 ABERDEEN STREET
HAWKESBURY
ONTARIO K6A 1K7

LIVRÉ À /
SHIP TO:

INSTRUCTIONS SPÉCIALES / SPECIAL INSTRUCTIONS

COMMANDE SALES ORDER	CODE DE CLIENT CUSTOMER CODE	BON D'ACHAT DU CLIENT CUSTOMER PURCHASE ORDER	N° DE TÉLÉPHONE DU CLIENT CUSTOMER TELEPHONE NUMBER	N° DE TÉLÉCOPIEUR DU CLIENT CUSTOMER FAX NO.	
0164953	DART	5756	613 632-5200	632-4443	
LIVRÉ VIA - SHIP VIA	CONDITIONS - TERMS	DATE COMMANDÉE DATE ORDERED	DATE REQUISE DATE REQUIRED	DATE LIVRÉE DATE DELIVERED	N° DU VENDEUR SALES REP NO.
NIR:R-557065-1	NET 30	Feb-21-08	Feb-22-08		15 26 EB

CONTRÔLE DE QUALITÉ DU CLIENT REQUIS / CUSTOMER QUALITY RELEASE REQ'D ☐ CONTRÔLE DE QUALITÉ DE MAGNA REQUIS / MAGNA QUALITY RELEASE REQ'D ☐ PRÉPAYÉ / PREPAID ☐ À PERCEVOIR / COLLECT ☐

QUALITÉ - QUALITY COMMANDÉE ORDERED	QUALITÉ - QUALITY À VENIR - B/O	UNITÉ UNIT	N° DE COULÉE HEAT NUMBER	DESCRIPTION	QTÉ LIVRÉE QTY SHIPPED	PRIX PAR PRICE PER	INSTRUCTIONS DE L'USINE PLANT INSTRUCTIONS
4		pcs		6061-T6 ALUM FLAT 1 X 4 X 20'			4 pcs
							Y20
							Pc 8/4/si
				T O T A L :			376 LBS

NOMBRE DE PAQ.
NUMBER OF BOL'S _____

MTR-AVEC COMMANDE / MTR'S-WITH ORDER [X] POSTE / MAIL ☐ TÉLÉCOPIEUR / FAX ☐

PACKING SLIP / BON D'EMBALLAGE

Page: 1
08:49:12 20080221

N° DE COULÉE ÉTAMPER SUR LE CÔTÉ / HEAT NO. STAMP ONE END ☐

REVISION "K" - 07/01 - FORM 2008

MATÉRIEL REÇU EN BON ÉTAT PAR / MATERIAL RECEIVED IN GOOD CONDITIONS BY: _____

DART

Purchase Order

Date	Page
Feb 21, 2008	1

Purchase Order Number
PO00005756

Dart Aerospace Ltd
1270 Aberdeen St
Hawksbury, Ontario K6A 1K7
Phone: **(613)632-9577**
Fax: **(613)632-1053**

FAXED

Vendor Address:
Magna Stainless
525 avenue Meloche
Dorval, QC H9P 2W2
Canada
Phone (800) 363-6646
Fax (514) 631-0013

Ship To:
Main Finished Goods Location
Dart Aerospace Ltd
1270 Aberdeen St
Hawksbury, Ontario K6A 1K7

Reference	Contact	Vendor Number	PO Date	Terms	Ship Via	Expected Arrival
		VC-MAG002	Feb 21, 2008	N30	yours	Feb 22, 2008

Qty. Ordered	Item Number	Description	Expected Arrival	Drop-Ship	Unit Cost	UOM	Extended Price
80.0000	M6061T6B1000X040	6061-T6 Bar 1.0" x 4.0"	2/22/2008	No	10.500000	f	840.00
		Comments: MATERIAL: 6061-T6 OR 6061-T650/T6510/T6511/T62 BAR PER AMS-QQ-A-225/8 OR AMS 4117/4128/4115/4116 PER AMS-QQ-A-200/8 OR AMS 4160					

MATERIAL CERTIFICATION REQ'D UPON DELIVERY

Comments:

Tax Summary:

GST	42.00
ONTPST	0.00

Less: included tax	0.00
Subtotal	840.00
Total tax	42.00
Total purchase order in CAD Dollars	882.00

Entered By: CL CLAVOIE

Approved By: _____

INDALEX
ALUMINUM SOLUTIONS

325 rue Avro
Pointe-Claire QC H9R 5W3

Téléphone (514) 697-5120
Fac-simile (514) 694-8310

Test de dureté Rockwell
Rockwell Hardness Test

Client / Customer : **MAGNA STAINLESS INC.**

Adresse / Address : **525, Meloche**
Dorval (Québec)
H9P 2W2

commande Indalex / Indalex order # : **7100595**

bon de commande / Purchase order # : **071484-EB**

de matrice / Die # : **MS 16386** Description : **4.00" X 1.00"FLAT BAR**

Alliage & trempage / Alloy & temper : **6061 T6**

Contrôle / Control # : **58937-1**

Coulée / Cast # : **41756**

Dureté Rockwell E / Rockwell E hardness : **93 HRE** Min. requis / Min. required : **88 HRE** Max. permis / Max. permitted : **100 HRE**

Composition chimique typique / Typical chemical composition :

	Si	Fe	Cu	Mn	Mg	Cr	Zn	Ti
6063	0,20 - 0,60	0,35 Max	0,10 Max	0,10 Max	0,45 - 0,90	0,10 Max	0,10 Max	0,10 Max
6005	0,60 - 0,90	0,35 Max	0,10 Max	0,10 Max	0,40 - 0,60	0,10 Max	0,10 Max	0,10 Max
6005A	0,66- 0,74	0,14 - 0,28	0,08 - 0,16	0,18 – 0,26	0,46 – 0,54	0,03 Max	0,05 Max	0,05 Max
6061	0,40 - 0,80	0,70 Max	0,15 – 0,40	0,15 Max	0,80 – 1,20	0,04 - 0,35	0,25 Max	0,15 Max
6351	0,7 - 1,3	0,5 Max	0,10 Max	0,40 - 0,80	0,40 - 0,80	—	0,20 Max	0,20 Max

Nous certifions que le matériel fourni rencontre les exigences chimiques telles qu'annoncées par la norme ASTM B-221 excepté pour la section 8.2 (nombre de spécimen) et AMS QQA 200/8 excepté pour la section 4.2.3.1 (nombre de spécimen) qui sont déterminés par les exigences du client.

We hereby certify that the material supplied meets the chemical properties as published by the ASTM B-221 except for section 8.2 (number of specimen) and AMS QQA 200/8 except for section 4.2.3.1 (number of specimen) which is determined by customer requirement.

Sincèrement vôtre,
Yours truly,

date : **2007-10-18**

Bruno Morency
Technicien de la qualité
Quality technician

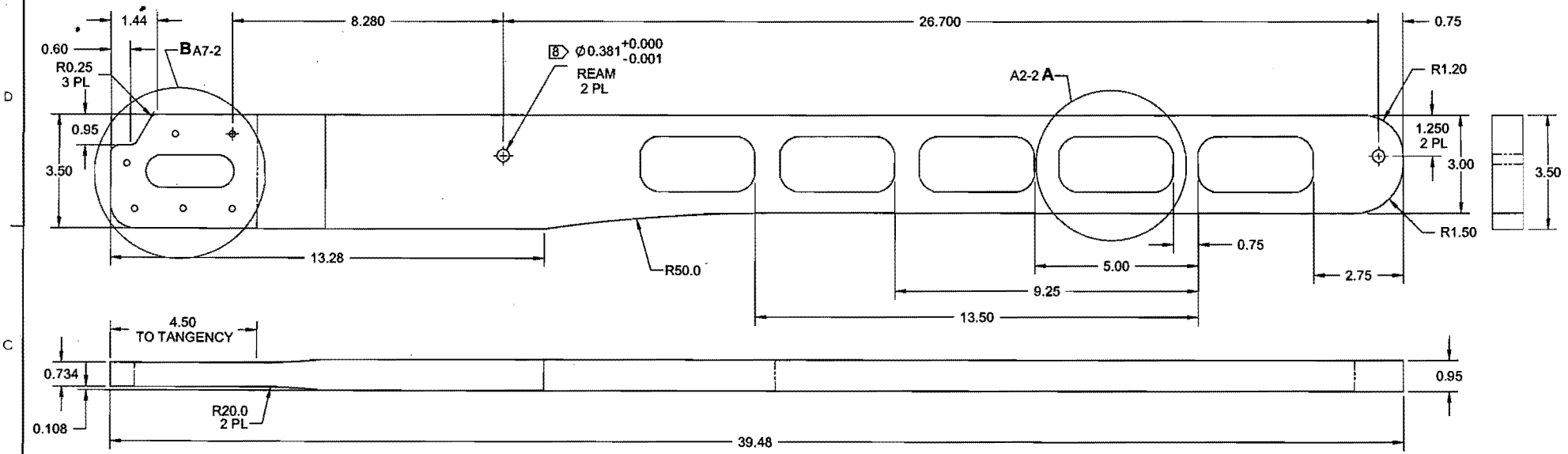

D4275-1 FWD BEAM

GRAIN DIRECTION

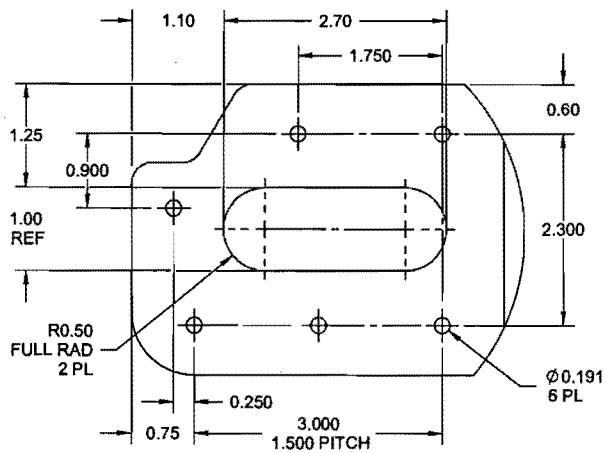

DETAIL B D8-2

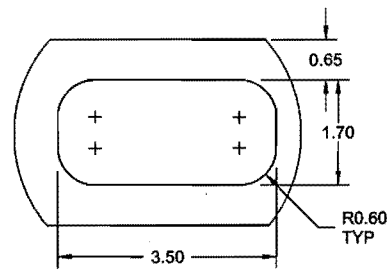

DETAIL A D3-2
5 PL

DESIGN	SC	**DART AEROSPACE LTD** HAWKESBURY, ONTARIO, CANADA
DRAWN	JPH	
CHECKED		DRAWING NO. D4275 — REV. A — SHEET 2 OF 2
MFG. APPR.		
APPROVED		TITLE FWD BEAM — SCALE NTS
DE APPR.		
DATE	10.11.25	

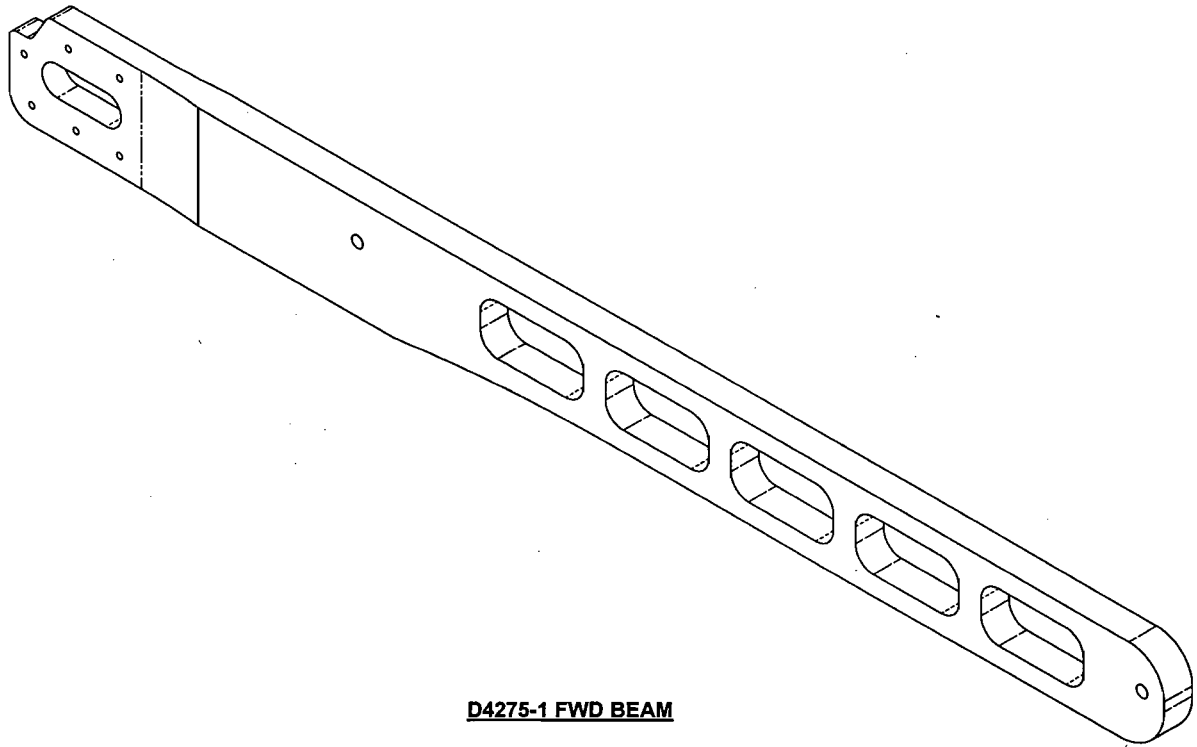

D4275-1 FWD BEAM

NOTES:
1) MATERIAL: 6061-T6/T651/T6510/T6511/T62 ALUMINUM BAR
PER QQ-A-225/8 OR AMS-QQ-A-225/8 (OR AMS 4117/4128/4115/4116)
OR QQ-A-200/8 OR AMS-QQ-A-200/8 (OR AMS 4160)
OR ASTM B211 OR ASTM B221
REF DART SPEC M6061T6B
2) FINISH: CHEMICAL CONVERSION COAT PER DART QSI 005 4.1
POWDER COAT WHITE (4.3.5.1) PER DART QSI 005 4.3
3) TOLERANCES: PER DART QSI 018 UNLESS OTHERWISE NOTED
4) UNITS: INCHES UNLESS OTHERWISE NOTED
5) BREAK SHARP EDGES: 0.005 TO 0.010 MAX
6) IDENTIFICATION: N/A
7) WEIGHT: 8.29 lbs
8) MASK HOLES PRIOR TO POWDER COAT.

REV.	DESCRIPTION	BY	DATE
A	NEW ISSUE	SC	10.11.25

DESIGN	SC	**DART AEROSPACE LTD** HAWKESBURY, ONTARIO, CANADA
DRAWN	JPH	
CHECKED		DRAWING NO. D4275 — REV. A — SHEET 1 OF 2
MFG. APPR.		
APPROVED		TITLE: FWD BEAM — SCALE: NTS
DE APPR.		
DATE	10.11.25	